www.esbe.eu

SERIES 90

NO.1 IN HYDRONIC SYSTEM CONTROL

Mtrl.nr. 9814 01 50 • Ritn.nr. 3399 utg. H • Rev. 1512

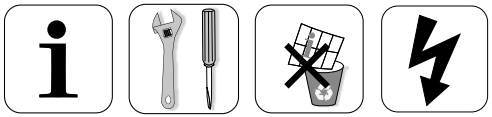

Series 90

CE

LVD 2006/95/EC valid until April 19th	2016
LVD 2014/35/EU valid from April 20th	2016
EMC 2004/108/EC valid until April 19th	2016
EMC 2014/30/EU valid from April 20th	2016

RoHS 2011/65/EU

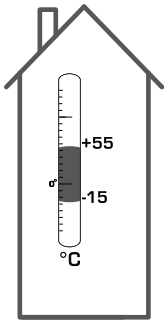

SERIES 90

+

3MG, 4MG, 5MG

3G, 4G

3F, 4F ≤ DN50

BIV

T, TM

3HG, 4HG, 3H, 4H

VRG, VRB, VRH

1

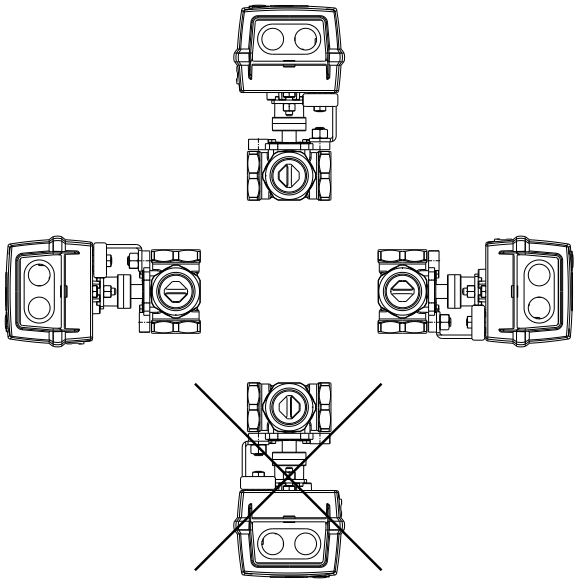

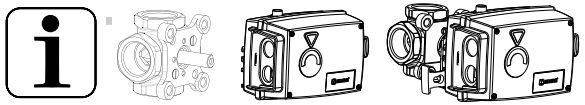

+

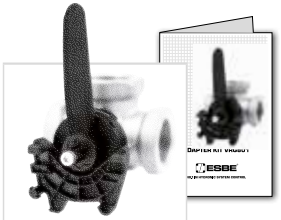

ADAPTER KIT VRG801

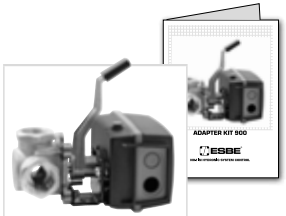

ADAPTER KIT VRG900

+

VRG, VRB, VRH

+

3G, 4G

3F, 4F

3MG, 4MG, 5MG

BIV

T, TM

3HG, 4HG, 3H, 4H

2

97 - 98

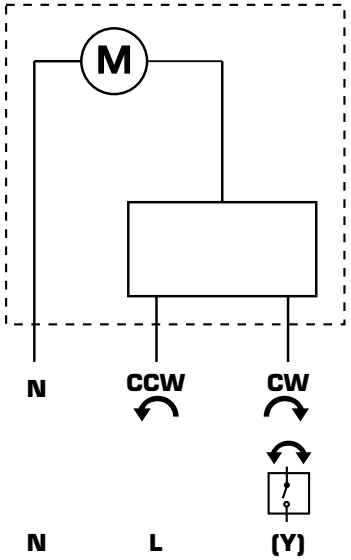

92P, 92P2, 92P4

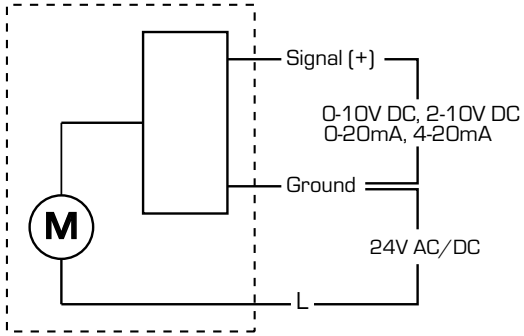

91 - 96, 90SL

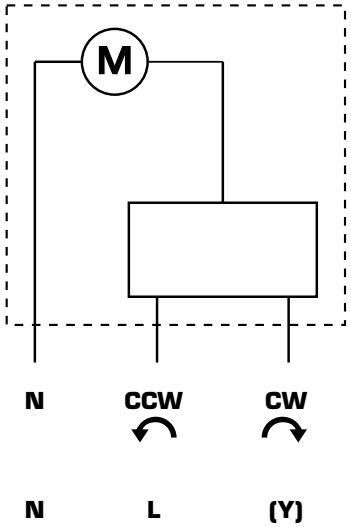

91M - 96M

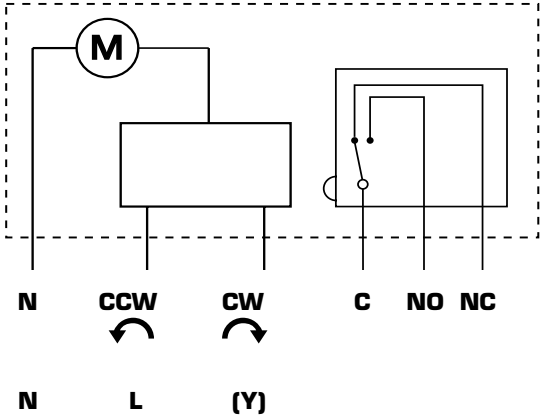

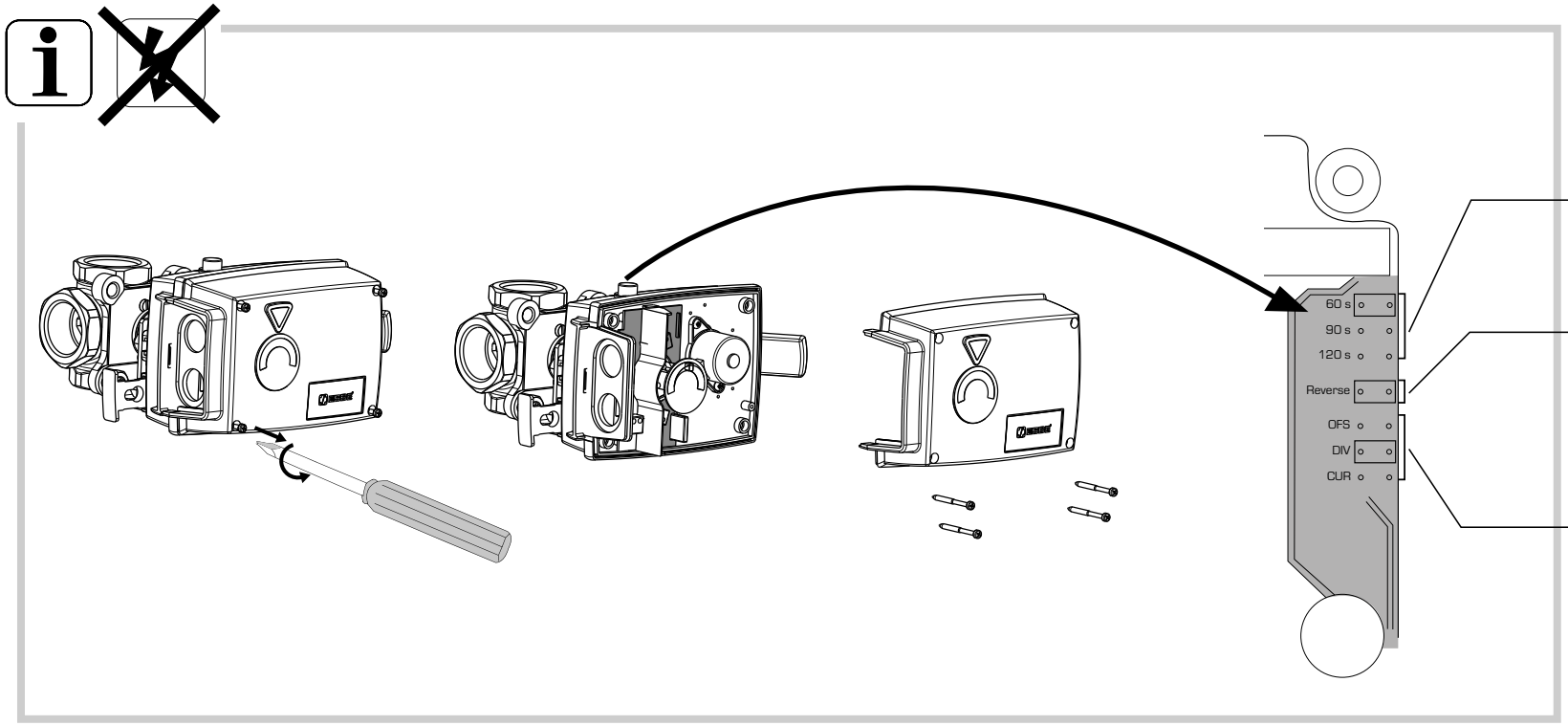

91P - 92P, 92P2, 92P4

92P	92P2	92P4
60 s / 90 s / 120 s	120 s / 180 s / 240 s	130 s / 260 s / 390 s
60 s / 90 s / 120 s	120 s / 180 s / 240 s	130 s / 260 s / 390 s
60 s / 90 s / 120 s	120 s / 180 s / 240 s	130 s / 260 s / 390 s

Reverse	
Reverse	
0-20 mA	OFS / DIV / CUR
4-20 mA	OFS / DIV / CUR
0-10 V	OFS / DIV / CUR
2-10 V	OFS / DIV / CUR
0-5 V	OFS / DIV / CUR
1-5 V	OFS / DIV / CUR

97 - 98

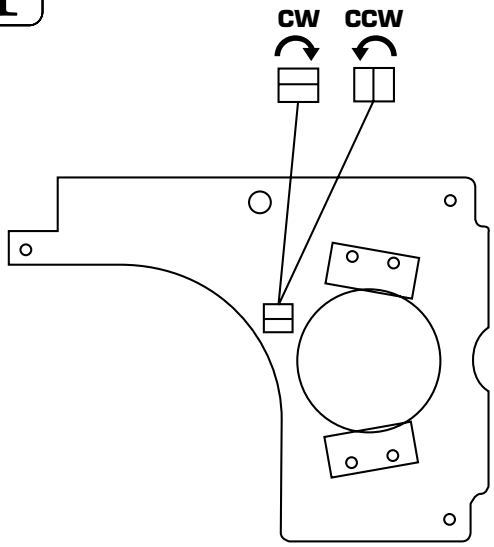

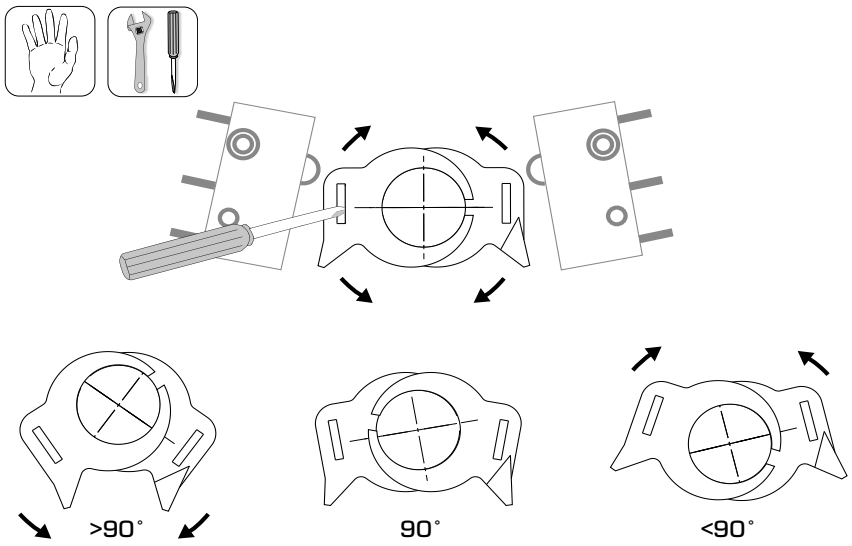

91M-96M, 95-270M

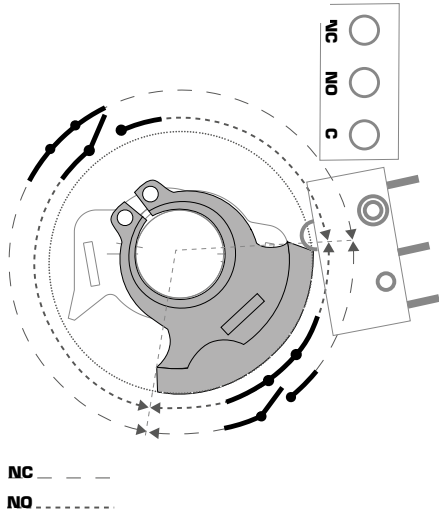

91-96, 91M-96M, 90SL, 97-98

90°

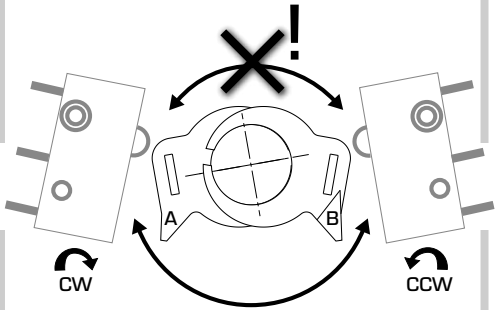

95-270M

270°

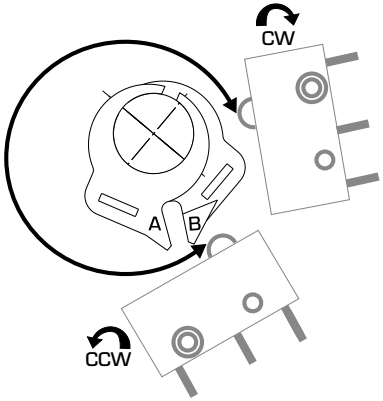

92P2

180

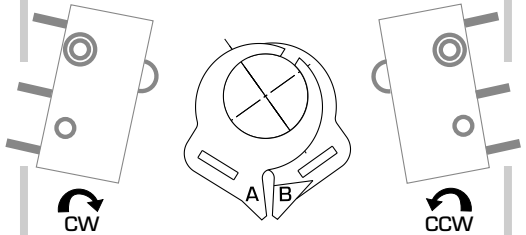

92P4

355°

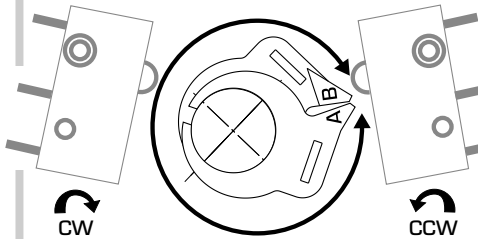
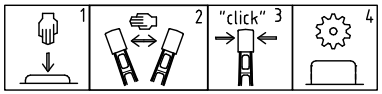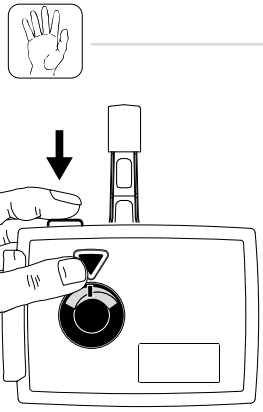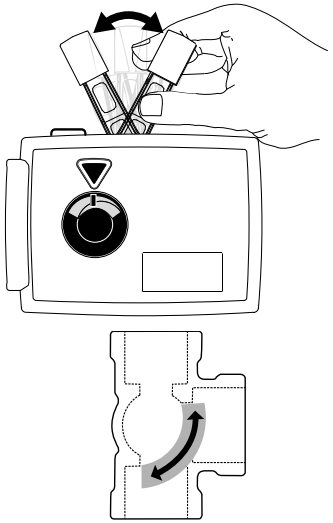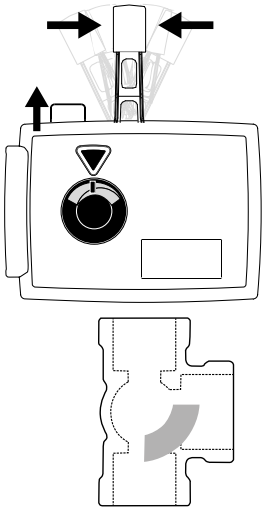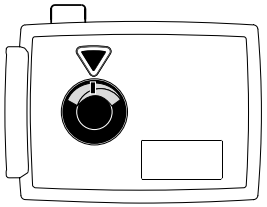
6